Name : Shubham kumar
Add no: 25MT0517
IIT(ISM) dhanbad

Verilog coding
Day-03
Mux 2X1

Write a Verilog program to implement a **2×1 Multiplexer** using:

- Gate-Level Modeling
- Dataflow Modeling
- Behavioral Modeling

  Also, write a testbench to verify the design.

2X1 MUX USING DATAFLOW

```
module mux2x1_df(input i0, i1, input s, output y);
  assign y = (~s & i0) | (s & i1);
endmodule
```

Gate Level Modeling Mux2X1

```
module mux2x1_gl(input i0, i1, input s, output y);
  wire sn, w1, w2;

  not (sn, s);
  and (w1, sn, i0);
  and (w2, s, i1);
  or  (y, w1, w2);
endmodule
```

Behavioral Modeling Mux2X1

```
module mux2x1_bh(input i0, i1, input s, output reg y);

  always @(*) begin
    if (s == 0)
      y = i0;
    else
      y = i1;
  end
endmodule
```

Test bench Mux 2X1

```
module mux_tb;
```

```
  reg i0, i1, s;
  wire y;
  mux2x1_gl DUT (.i0(i0), .i1(i1), .s(s), .y(y));
  initial begin
    $monitor("%b |  %b  %b | %b", s, i0, i1, y);
    i0=0; i1=1;
    s=0; #10;
    s=1; #10;
    i0=1; i1=0;
    s=0; #10;
    s=1; #10;
    $finish;
  end
endmodule
```

waveform Mux2X1

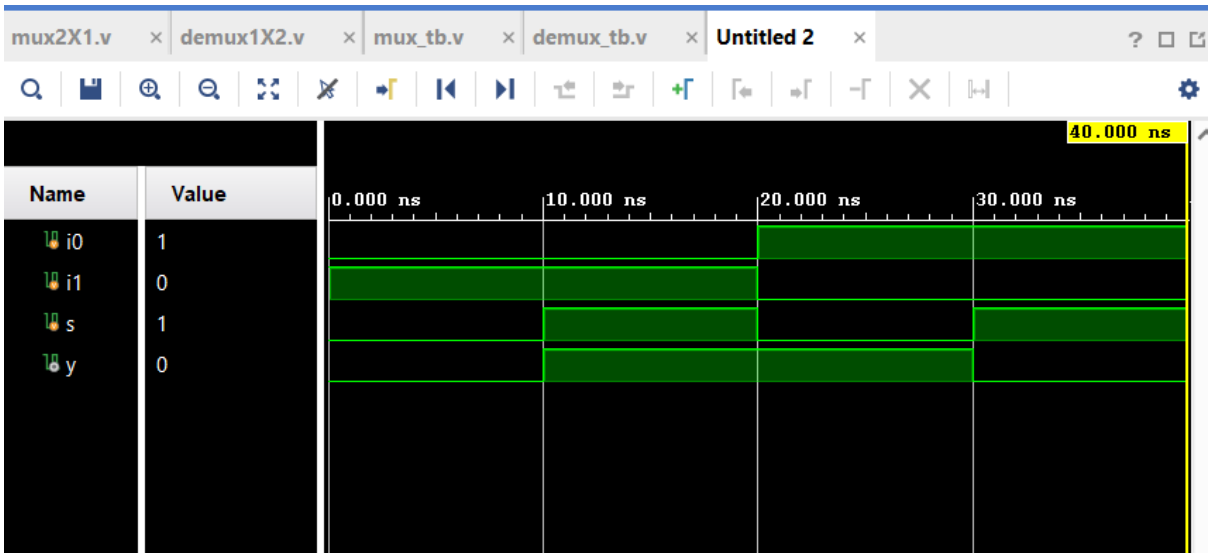

RTL design Mux2X1

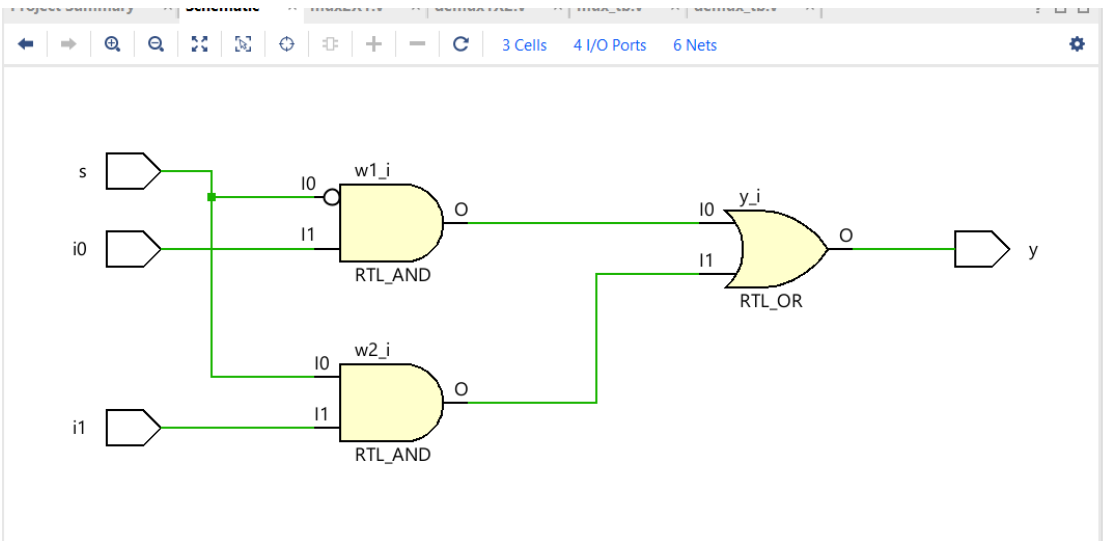

Schematic design Mux2X

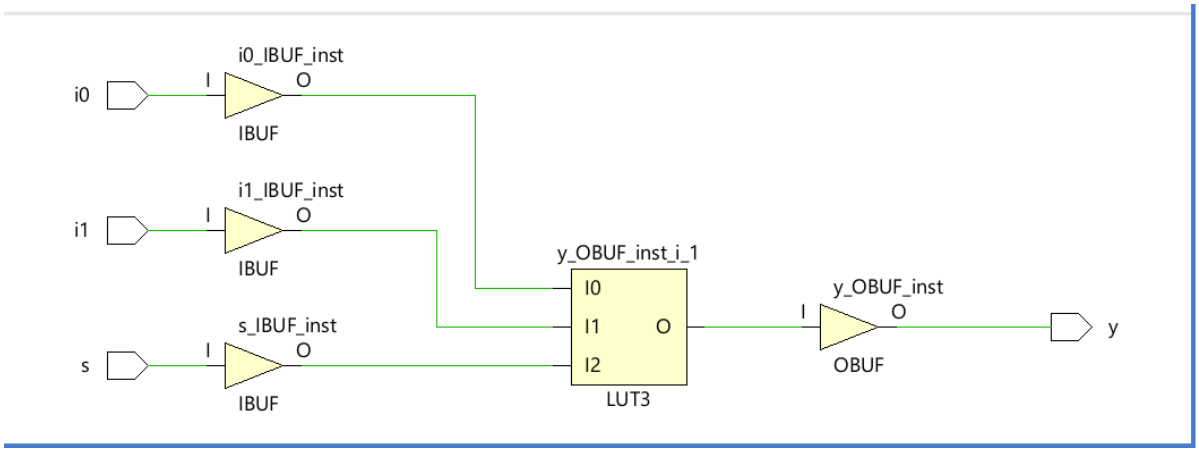

DEMUX 1X2

Write a Verilog program to implement a **1×2 DEMULTIPLEXER** using:

- Gate-Level Modeling
- Dataflow Modeling
- Behavioral Modeling

  Also, write a testbench to verify the design.

1X2 DEMUX USING DATAFLOW

```
module demux1x2_df(input d, input s, output y0, y1);

  assign y0 = d & ~s;
  assign y1 = d & s;

endmodule
```

Gate Level Modeling Demux 1X2

```
module demux1x2_gl(input d, input s, output y0, y1);
  wire sn;
  not (sn, s);
  and (y0, d, sn);
  and (y1, d, s);
endmodule
```

Behavioral Modeling Demux 1X2

```
 module demux1x2_bh(input d, input s, output reg y0, y1);

  always @(*) begin
    y0 = 0;
    y1 = 0;
```

```
  if (s == 0)
    y0 = d;
  else
    y1 = d;
 end
endmodule
```

Test bench Demux 1X2

```
module demux_tb();
 reg d, s;
 wire y0, y1;

 demux1x2_df DUT (.d(d), .s(s), .y0(y0), .y1(y1));

 initial begin
  $monitor("%b %b | %b  %b", s, d, y0, y1);
  d=1;
  s=0; #10;
  s=1; #10;
  d=0;
 s=0; #10;
  s=1; #10;
  $finish;
 end
endmodule
```

waveform 1X2 Demux

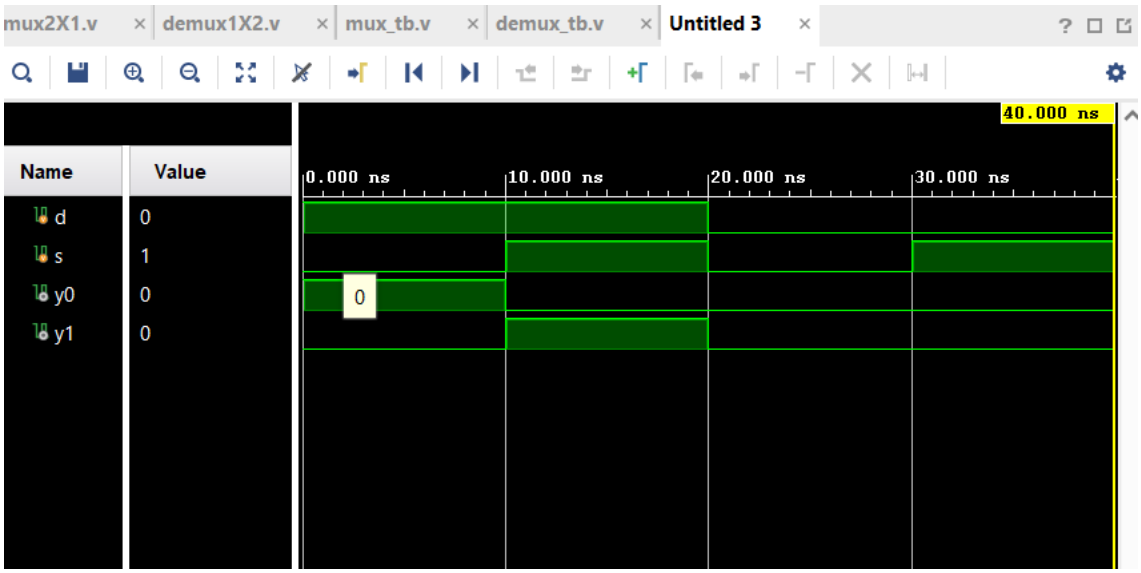

RTL design 1X2 Demux

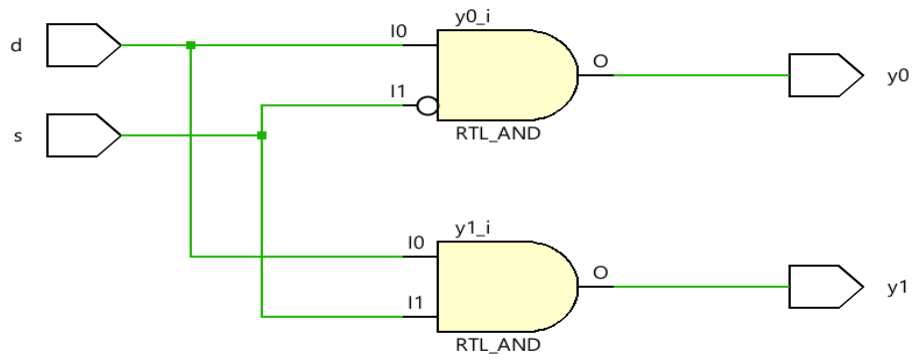
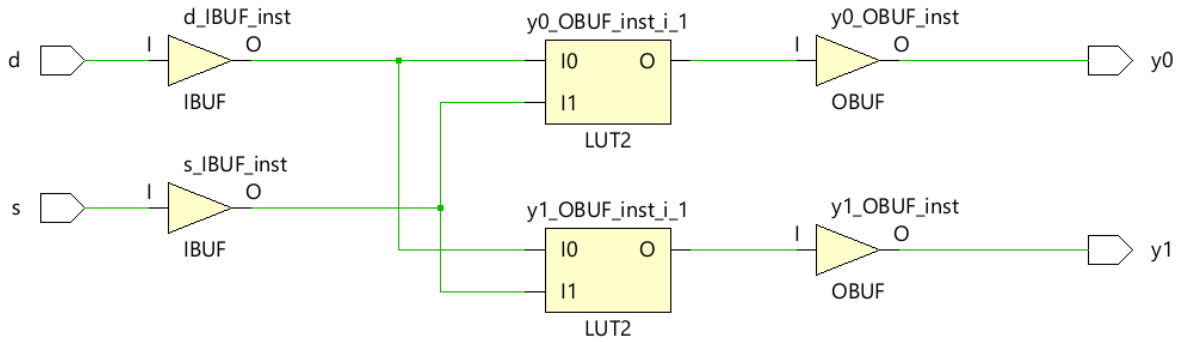
Schematic design Mux2X1